asil

SINK - GLASS

MODEL: AS 86 White

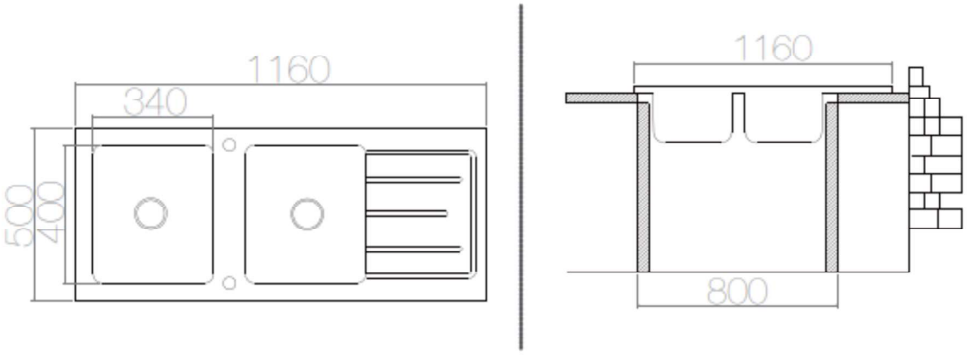

- Size: 1160 X 500 mm
- Depth: 200 mm
- Thickness: 1,00 mm
- Siphon hole: 90 mm
- Surface: Black glass
- Cut out length: 749 mm
- Cut out width: 599 mm
- Cabinet size: 800 mm